WATER SOURCE HEAT PUMP UNIT

SGHP(M) 600~4200



WATER SOURCE HEAT PUMP UNIT

Indoor installation
Cooling capacity from 535 to 3664 KW
Heating capacity from 577 to 4169 KW

Characteristics

High efficient condenser with large heat exchanger area
Flooded type evaporator increase evaporate temperature
Big fouling factor design

Available configurations

SGHP(M) 600 R(xx)% ST A 2
(1) (2) (3) (4)

(1) Heat Recovery:
XX Percentage of recovery

(2) Version:
ST Standard
EN Low noise type

(3) Refrigerants:
A R22
E Other refrigerants

(4) Power Supply:
2 380/3/50
4 460/3/60
6 Other power supply

Applications



Functions and features



Optional

Total and partial heat recovery
Copper/nickel heat exchanger
Brine water chiller (between +4˚C and -7˚C, using glycol solution)

Technical data

Model	SGHP(M)	Size	600	800	1000	1200	1600	2000	3100	3700	4200
Cooling	Cooling capacity	KW	535	722	887	1071	1445	1774	2723	3206	3664
	Power input	KW	91	116	148	182	232	296	444	520	588
Evaporator	Temp of inlet/outlet water	˚C					12/7				
	Chilled water flow	m³/h	92	124	153	184	248	305	468	551	630
	Resistance	KPa					60				
Condenser	Temp of inlet/outlet water	˚C					18/29				
	Cooling water flow	m³/h	49	66	81	98	131	162	248	291	332
	Resistance	KPa					30				
Heating	Heating capacity	KW	577	811	966	1155	1621	1932	3109	3656	4169
	Power input	KW	125	165	205	251	331	411	632	741	838
Evaporator	Temp of inlet/outlet water	˚C					15/7				
	Chilled water flow	m³/h	49	66	81	98	131	162	248	291	332
	Resistance	KPa					30				
Condenser	Temp of inlet/outlet water	˚C					40/45.5				
	Cooling water flow	m³/h	92	124	153	184	248	305	468	551	630
	Resistance	KPa					60				
Compressor	Nr.		1	1	1	2	2	2	2	2	2
Power regulation stage		%	50-75-100				25-37.5-50-62.5-75-87.5-100				
Refrigerant	Type		R22								
	Weight	kg	140	195	240	140 x 2	195 x 2	240 x 2	350 x 2	410 x 2	460 x 2
Electrical	Power supply		380V/3P/50Hz								
	Safety protection		High/low pressure/water lacking/anti-frozen/compressor over loading/oil heater/safety valve								
Chilled inlet/outlet nozzle		DN	125	150	150	150	200	200	250	250	300
Cooling inlet/outlet nozzle		DN	125	150	150	150	200	200	250	250	300
Fouling factor		m²·k/kW	0.086								
Noise		dB(A)	79	80	81	80	80	81	82	82	83
Weight		kg	5000	5600	6500	7000	7500	7780	12600	13860	15100

Note:
Underground water cooling: chilled water inlet temperature 12˚C, chilled water outlet temperature 7˚C, cooling water inlet temperature 18˚C, cooling water outlet temperature 29˚C.
Underground water heating: chilled water inlet temperature 15˚C, chilled water outlet temperature 7˚C, cooling water inlet temperature 40˚C, cooling water outlet temperature 45.5˚C.
Noise measured at 1m in open field.

扫描全能王
3亿人都在用的扫描App

Dimensions

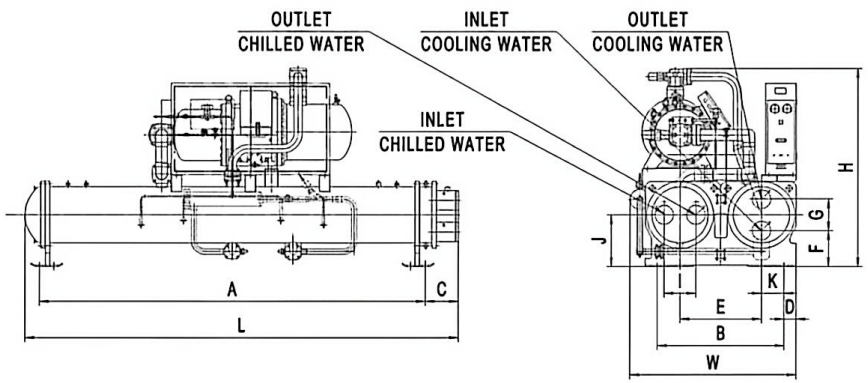

Size	L	W	H	A	B	C	D	E	F	G	I	J	K
600	3560	1370	1470	3170	1040	285	100	670	275	270	270	425	185
800	3770	1510	1910	3370	1120	288	100	720	290	300	300	450	200
1000	3780	1570	1915	3370	1240	295	100	780	310	320	320	480	230

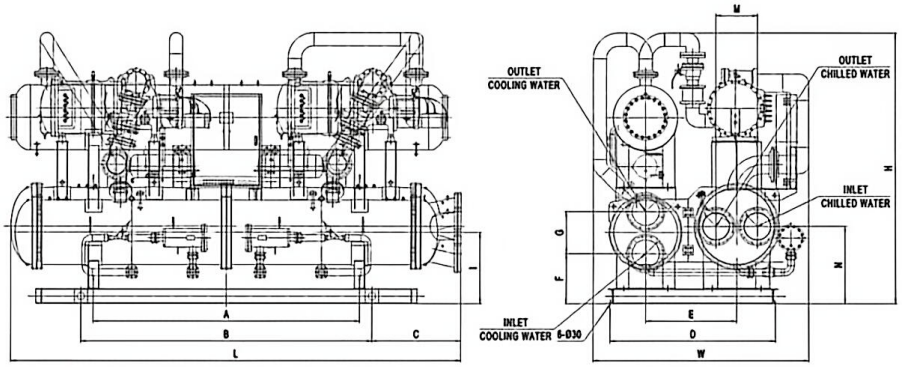

Size	L	W	H	A	B	C	D	E	F	G	M	N	I
3100	5410	2480	3175	3200	3500	1070	1990	945	565	450	450	865	790
3700	5410	2630	3325	3200	3500	1070	1990	1045	590	450	450	890	815
4200	5410	2680	3235	3200	3500	1070	1990	1095	600	500	500	925	850

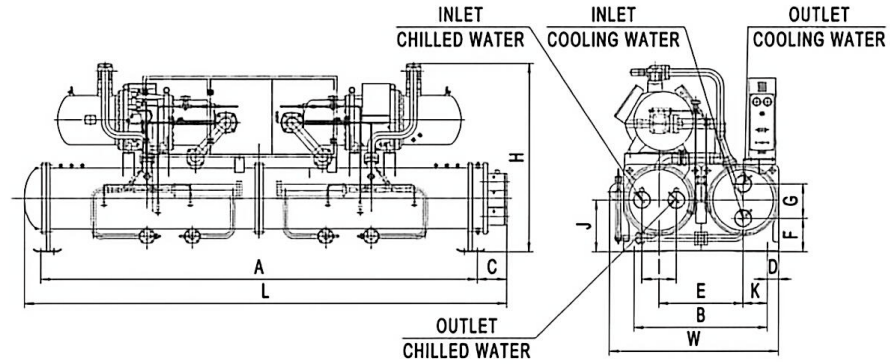

Size	L	W	H	A	B	C	D	E	F	G	I	J	K
1200	4470	1570	1760	4045	1240	308	100	780	290	320	320	480	230
1600	4770	1665	1950	4245	1340	308	100	830	310	350	350	505	255
2000	4800	1875	2200	4245	1440	315	100	880	330	380	380	530	280

扫描全能王
3亿人都在用的扫描App