# ROOFTOP PACKAGE UNIT

*RFA-C RFA-H 2~115*



## ROOFTOP PACKAGE UNIT

Outdoor and Roof Top installation
Capacity from 8.7 to 404 KW

## Characteristics

Low noise
Anti-corrosive panel
Compact design

## Available configurations

RFA 2 C S A 1
(1) (2) (3) (4)

(1) Version 1:
- C Cooling only type
- H Heat pump type

(2) Version 2:
- S Standard
- R Heat recovery type
- F Free-Cooling type
- T Specially made

(3) Refrigerants:
- A R22
- B R407C
- C R134a
- D R410A
- E Other refrigerants

(4) Power Supply:
- 1 220/1/50
- 2 380/3/50
- 3 230/1/60
- 4 460/3/60
- 5 220/3/60
- 6 Other power supply

## Applications




## Functions and features




## Optional

| | |
|---|---|
| Electric heater | Dehumidifier |
| Hot water coil | $CO_2$ detection |
| Heat recovery | T3 Working condition |
| Free-Cooling | Copper fins |
| Variable air flow supply | G3 G4 F5 filter |
| Humidifier | |

## Technical data

| Model | RFA-H | Size | 2 | 3 | 4 | 5 | 6 | 7 | 8 | 10 | 15 | 17 | 20 | 25 |
|---|---|---|---|---|---|---|---|---|---|---|---|---|---|---|
| General | Cooling capacity | KW | 8.7 | 10.5 | 12.9 | 14.8 | 17.4 | 21.7 | 29.05 | 35 | 52.5 | 59.5 | 70 | 87.5 |
| | Power input | KW | 2.72 | 3.08 | 3.74 | 4.15 | 4.83 | 6.35 | 7.5 | 9 | 13.5 | 15 | 18.75 | 22.5 |
| | Heating capacity | KW | 9.3 | 11.1 | 13.5 | 15.6 | 18.6 | 22.8 | 30 | 36 | 53 | 61 | 72 | 88 |
| | Power input | KW | 2.46 | 2.81 | 3.39 | 3.74 | 4.35 | 5.72 | 7.3 | 8.7 | 13 | 14 | 18 | 22 |
| | Power regulation stage | % | 100 | 100 | 100 | 100 | 100 | 100 | 100 | 100 | 50-100 | | | |
| Compressor | Nr. | | 1 | 1 | 1 | 1 | 1 | 1 | 1 | 1 | 2 | 2 | 2 | 2 |
| | Type | | Scroll | | | | | | | | | | | |
| | Oil | | P.V.E. | | | | | | | | P.O.E. | | | |
| | Oil volume | L | 1.7 | 1.7 | 1.7 | 1.7 | 1.7 | 2.8 | 4 | 4 | 6 | 8 | 8 | 11 |
| User side fan | Type | | Centrifugal | | | | | | | | | | | |
| | Nr. | | 1 | 1 | 1 | 1 | 1 | 1 | 1 | 1 | 2 | 2 | 2 | 2 |
| | Power input | KW | 0.33 | 0.53 | 0.74 | 1.1 | 1.33 | 1.69 | 1.2 | 1.5 | 2.4 | 2.4 | 3 | 4 |
| | Air flow | $m^3/h$ | 1500 | 2000 | 2500 | 3200 | 4100 | 4800 | 5200 | 6300 | 8930 | 10600 | 12650 | 16000 |
| | E.S.P | Pa | 60 | 60 | 80 | 80 | 110 | 110 | 120 | 120 | 140 | 140 | 140 | 160 |
| User side air-exchanger | Type | | Fin coil | | | | | | | | | | | |
| | Material | | Al/Cu | | | | | | | | | | | |
| Source side Fan | Type | | Axial | | | | | | | | | | | |
| | Nr. | | 1 | 1 | 1 | 1 | 1 | 1 | 1 | 1 | 2 | 2 | 2 | 2 |
| | Power input | KW | 0.41 | 0.41 | 0.45 | 0.45 | 0.73 | 0.73 | 0.75 | 1.1 | 1.5 | 1.5 | 2.2 | 2.6 |
| | Air flow | $m^3/h$ | 4500 | 5500 | 6500 | 7500 | 9000 | 10000 | 12600 | 15200 | 21500 | 25500 | 30500 | 38500 |
| Source side air-exchanger | Type | | Fin coil | | | | | | | | | | | |
| | Material | | Al/Cu | | | | | | | | | | | |
| Refrigerant | Nr. of circuits | | 1 | 1 | 1 | 1 | 1 | 1 | 1 | 1 | 2 | 2 | 2 | 2 |
| | Type | | R407C | | | | | | | | | | | |
| | Weight | kg | 2.4 | 2.8 | 3.2 | 3.5 | 4.2 | 5.6 | 7.2 | 8 | 12 | 15 | 18 | 22 |
| Power supply | | | 380V/3P/50Hz | | | | | | | | | | | |
| Noise | | dB(A) | 63 | 63 | 68 | 68 | 70 | 70 | 69 | 69 | 70 | 70 | 70 | 71 |
| Weight | | kg | 160 | 175 | 215 | 230 | 265 | 278 | 550 | 600 | 780 | 945 | 998 | 1150 |

Note:
Cooling rated condition: indoor temperature 27°C (DB)/19.5°C (WB).
Heating rated condition: outdoor temperature 7°C (DB)/6°C (WB),indoor temperature 20°C (DB)
Ambient temperature 35°C.
Noise measured at 1m in open field.



CS 扫描全能王 3亿人都在用的扫描App

| Model | RFA | Size | 30 | 33 | 36 | 40 | 50 | 60 | 65 | 70 | 80 | 85 | 115 |
|---|---|---|---|---|---|---|---|---|---|---|---|---|---|
| General | Cooling capacity | KW | 105 | 115.5 | 126 | 140 | 175.8 | 210.96 | 228.54 | 246.12 | 281.28 | 298.86 | 404.34 |
| | Compressor power input | KW | 28.5 | 30 | 33.75 | 37.5 | 45 | 57 | 60 | 67.5 | 75 | 81 | 112.5 |
| | Heating capacity | KW | 106 | 118 | 130 | 142 | 180 | 213 | 230 | 251 | 285 | 302 | 410 |
| | Compressor power input | KW | 28 | 29.6 | 33.5 | 37 | 44.5 | 56 | 59 | 67 | 74.3 | 80 | 110 |
| | Power regulation stage | % | | 25-50-75-100 | | | 16.6+16.6 Increase | | | 25-50-75-100 | | | 12.5+12.5 Increase |
| Compressor | Nr. | | 4 | 4 | 4 | 4 | 6 | 6 | 4 | 4 | 4 | 4 | 2 |
| | Type | | Scroll | | | | | | | | | | Screw |
| | Oil | | P.O.E. | | | | | | | | | | |
| | Oil volume | L | 12 | 16 | 16 | 16 | 24 | 24 | 32 | 32 | 32 | 32 | 30 |
| Fan of evaporator | Type | | Centrifugal | | | | | | | | | | |
| | Nr. | | 2 | 2 | 2 | 2 | 2 | 2 | 2 | 2 | 2 | 2 | 2 |
| | Power input | KW | 4.4 | 6 | 7 | 7.4 | 10 | 11 | 15 | 15 | 18 | 18 | 22 |
| | Air flow | $m^3/h$ | 19360 | 21600 | 23450 | 27000 | 32860 | 39432 | 42718 | 46004 | 52576 | 55862 | 75578 |
| | Air pressure | Pa | 160 | 200 | 200 | 200 | 200 | 240 | 240 | 240 | 240 | 240 | 240 |
| Evaporator | Type | | Fin coil | | | | | | | | | | |
| | Material | | Al/Cu | | | | | | | | | | |
| Fan of condenser | Type | | Axial | | | | | | | | | | |
| | Nr. | | 2 | 4 | 4 | 4 | 4 | 4 | 6 | 6 | 6 | 6 | 8 |
| | Power input | KW | 2.6 | 3 | 3 | 3 | 4.4 | 5.2 | 7.8 | 7.8 | 7.8 | 7.8 | 10.4 |
| | Air flow | $m^3/h$ | 46500 | 51900 | 56400 | 64900 | 72500 | 94000 | 101100 | 110100 | 125300 | 133350 | 179000 |
| Condenser | Type | | Fin coil | | | | | | | | | | |
| | Material | | Al/Cu | | | | | | | | | | |
| Refrigerant | Nr. of circuits | | 2 | 2 | 2 | 2 | 2 | 2 | 2 | 2 | 2 | 2 | 2 |
| | Type | | R407C | | | | | | | | | | |
| | Weight | kg | 25 | 28 | 30 | 35 | 44 | 52 | 56 | 60 | 70 | 72 | 98 |
| Power supply | | | 380V/3P/50Hz | | | | | | | | | | |
| Noise | | dB(A) | 71 | 72 | 72 | 73 | 73 | 74 | 74 | 74 | 75 | 75 | 80 |
| Weight | | kg | 1230 | 1680 | 1760 | 1800 | 1900 | 3000 | 3500 | 3700 | 3900 | 4100 | 5000 |

Note:
Cooling rated condition: indoor temperature 27°C (DB)/19.5°C (WB).
Heating rated condition: outdoor temperature 7°C (DB)/6°C (WB),indoor temperature 20°C (DB)
Ambient temperature 35°C.
Noise measured at 1m in open field.

## Dimensions

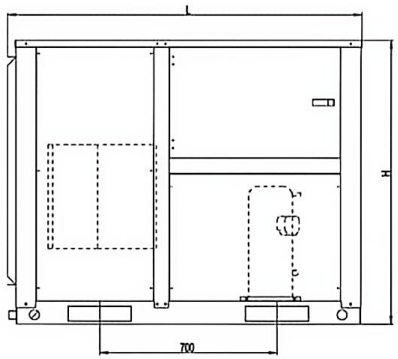


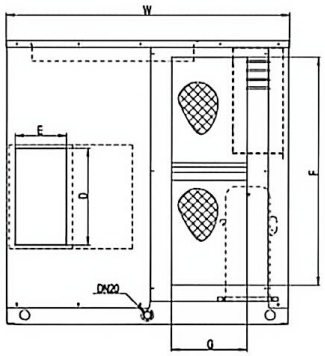


2-7

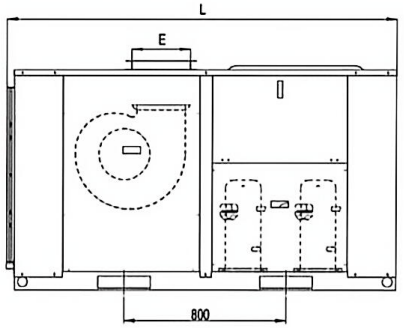


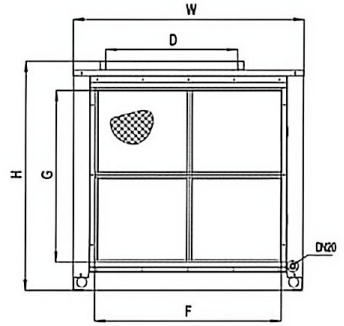


8-10

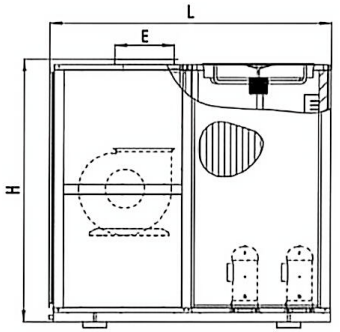


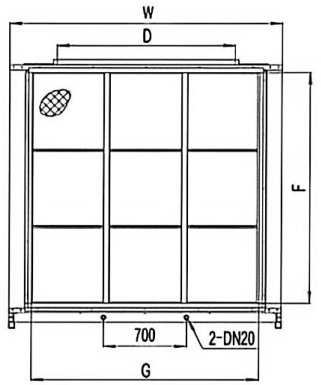


15-115

| Size | 2 | 3 | 4 | 5 | 6 | 7 | 8 | 10 | 15 | 17 | 20 | 25 | 30 |
|---|---|---|---|---|---|---|---|---|---|---|---|---|---|
| L | 1160 | 1160 | 1160 | 1160 | 1400 | 1400 | 1930 | 1930 | 1930 | 1930 | 1930 | 1930 | 1930 |
| W | 975 | 975 | 975 | 975 | 1120 | 1120 | 1160 | 1160 | 2320 | 2320 | 2320 | 2320 | 2320 |
| H | 750 | 750 | 1120 | 1120 | 1120 | 1120 | 1135 | 1135 | 1135 | 1135 | 1135 | 2260 | 2260 |
| D | 240 | 240 | 265 | 290 | 310 | 380 | 650 | 650 | 1400 | 1500 | 1500 | 1500 | 1500 |
| E | 150 | 150 | 150 | 150 | 200 | 200 | 290 | 290 | 290 | 290 | 290 | 400 | 400 |
| F | 600 | 600 | 900 | 900 | 900 | 900 | 845 | 845 | 845 | 845 | 845 | 1920 | 1920 |
| G | 200 | 200 | 250 | 250 | 300 | 300 | 1010 | 1010 | 1920 | 1920 | 1920 | 1970 | 1970 |

| Size | 33 | 36 | 40 | 50 | 60 | 65 | 70 | 80 | 85 | 115 |
|---|---|---|---|---|---|---|---|---|---|---|
| L | 1930 | 2385 | 2385 | 3980 | 3980 | 3980 | 5800 | 5800 | 5800 | 7800 |
| W | 2320 | 2320 | 2320 | 2320 | 2320 | 2320 | 2320 | 2320 | 2320 | 2320 |
| H | 2260 | 2260 | 2260 | 2260 | 2260 | 2260 | 2260 | 2260 | 2260 | 2260 |
| D | 1500 | 1500 | 1500 | 1800 | 1800 | 1800 | 1800 | 2000 | 2000 | 2000 |
| E | 400 | 500 | 500 | 500 | 600 | 650 | 700 | 700 | 750 | 850 |
| F | 1920 | 1920 | 1920 | 1920 | 1920 | 1920 | 1920 | 1920 | 1920 | 1920 |
| G | 1970 | 1970 | 1970 | 1970 | 1970 | 1970 | 1970 | 1970 | 1970 | 1970 |

扫描全能王
3亿人都在用的扫描App