GROUND SOURCE HEAT PUMP UNIT

SGHP(ML) 500～3000



GROUND SOURCE HEAT PUMP UNIT

Indoor installation
Cooling capacity from 539 to 3576 KW
Heating capacity from 449 to 2988 KW

Characteristics

Designed for low temperature ground source condition
Flooded evaporator increase evaporation temperature
High efficient heat exchanger with large heat exchange area
Big fouling factor design

Available configurations

SGHP(ML) 500 R(xx)% ST A 2
(1) (2) (3) (4)

(1) Heat Recovery:
XX Percentage of recovery
(2) Version:
ST Standard
EN Low noise type

(3) Refrigerants:
A R22
C R134a
E Other refrigerants

(4) Power Supply:
2 380/3/50
4 460/3/60
6 Other power supply

Applications



Functions and features



Optional

Total and partial heat recovery
Copper/nickel heat exchanger
Brine water chiller (between +4˚C and -7˚C, using glycol solution)

Technical data

Model	SGHP(ML)	Size	500	600	800	1000	1200	1600	2300	2700	3000
Cooling	Cooling capacity	KW	539	699	857	1078	1398	1714	2658	3130	3576
	Power input	KW	95	125	159	190	250	318	478	558	632
Evaporator	Temp of inlet/outlet water	˚C					12/7				
	Chilled water flow	m³/h	93	120	147	186	240	294	457	538	615
	Resistance	KPa				50				90	
Condenser	Temp of inlet/outlet water	˚C					25/30				
	Cooling water flow	m³/h	109	3771	175	218	284	350	375	443	506
	Resistance	KPa					90				
Heating	Heating capacity	KW	449	584	726	898	1168	1452	2230	2622	2988
	Power input	KW	113	149	189	226	298	378	572	670	756
Evaporator	Temp of inlet/outlet water	˚C					0/-2.66				
	Chilled water flow	m³/h	109	142	175	218	284	350	375	443	506
	Resistance	KPa				120				130	
Condenser	Temp of inlet/outlet water	˚C					40/44.2				
	Cooling water flow	m³/h	93	120	147	186	240	294	457	538	615
	Resistance	KPa				50				90	
Compressor	Type						Screw				
	Nr.		1	1	1	2	2	2	2	2	2
Power regulation stage		%		50-75-100			25-37.5-50-62.5-75-87.5-100				
Refrigerant	Type						R22				
	Weight	kg	140	195	240	140×2	195×2	240×2	350×2	410×2	460×2
Electrical	Power supply						380V/3P/50Hz				
	Safety protection		HP gauge/LP gauge/water flow alarm/anti/freezing/compressor over loaded alarm/oil heater/safty valve								
Chilled inlet/outlet nozzle		DN	100	150	150	150	200	200	250	250	300
Cooling inlet/outlet nozzle		DN	100	150	150	150	200	200	250	250	300
Fouling factor		m²-k/kW					0.086				
Noise		dB(A)	79	80	81	80	81	82	82	83	83
Weight		kg	5000	5600	6500	7000	7500	7780	12600	13860	15100

Note:
Ground water cooling: chilled water cooling temperature 12˚C,water outlet temprature 7˚C;cooling water inlet temprature 25˚C, water outlet temperature 35˚C.
Ground water heating: chilled water cooling temperature 0˚C,water outlet temprature -2.66˚C;cooling water inlet temprature 40˚C, water outlet temperature 44.2˚C.
Because of the low evaporating temperature during heating operation,25-30% glycol solution is used on heat source side.
Noise measured at 1m in open field.

扫描全能王
3亿人都在用的扫描App

Dimensions

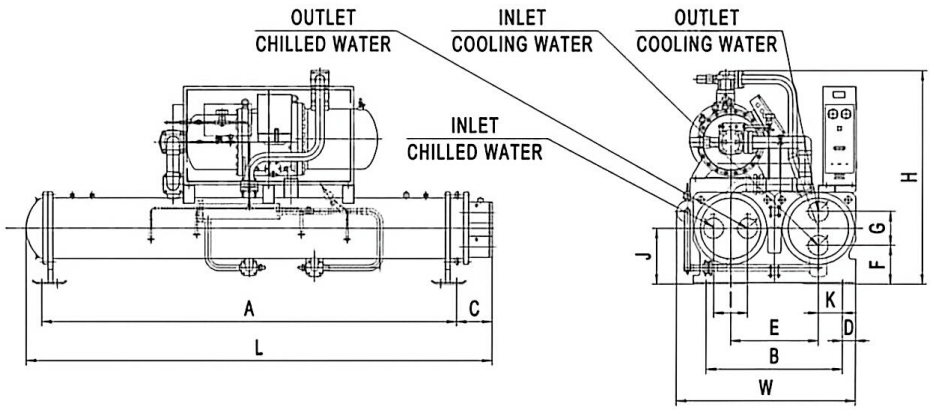

Size	L	W	H	A	B	C	D	E	F	G	I	J	K
500	3560	1370	1470	3170	1040	285	100	670	275	270	270	425	185
600	3770	1510	1910	3370	1120	288	100	720	290	300	300	450	200
800	3780	1570	1915	3370	1240	295	100	780	310	320	320	480	230

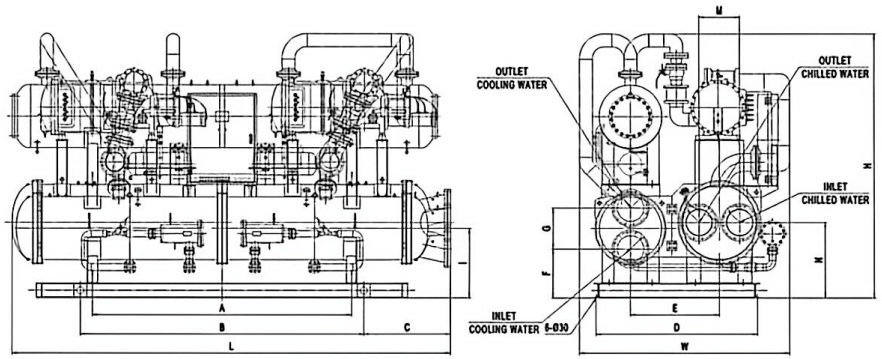

Size	L	W	H	A	B	C	D	E	F	G	M	N	I
2300	5410	2480	3175	3200	3500	1070	1990	945	385	565	450	865	790
2700	5410	2630	3325	3200	3500	1070	1990	1045	410	590	450	890	815
3000	5410	2680	3235	3200	3500	1070	1990	1045	435	600	500	925	850

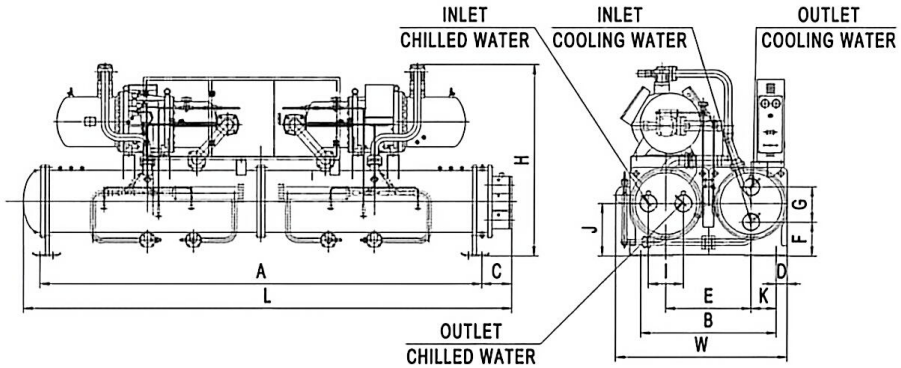

Size	L	W	H	A	B	C	D	E	F	G	I	J	K
1000	4470	1570	1760	4045	1240	308	100	780	290	320	320	480	230
1200	4685	1840	2095	4245	1340	308	100	830	310	350	350	505	255
1600	4800	1875	2200	4245	1440	315	100	880	330	380	380	530	280

扫描全能王
3亿人都在用的扫描App